MICRO SWITCH
FREEPORT ILLINOIS, U.S.A.
A DIVISION OF HONEYWELL
FED. MFG. CODE 91929

SWITCH-BASIC

CATALOG LISTING
BZ-2RDS-A2-S

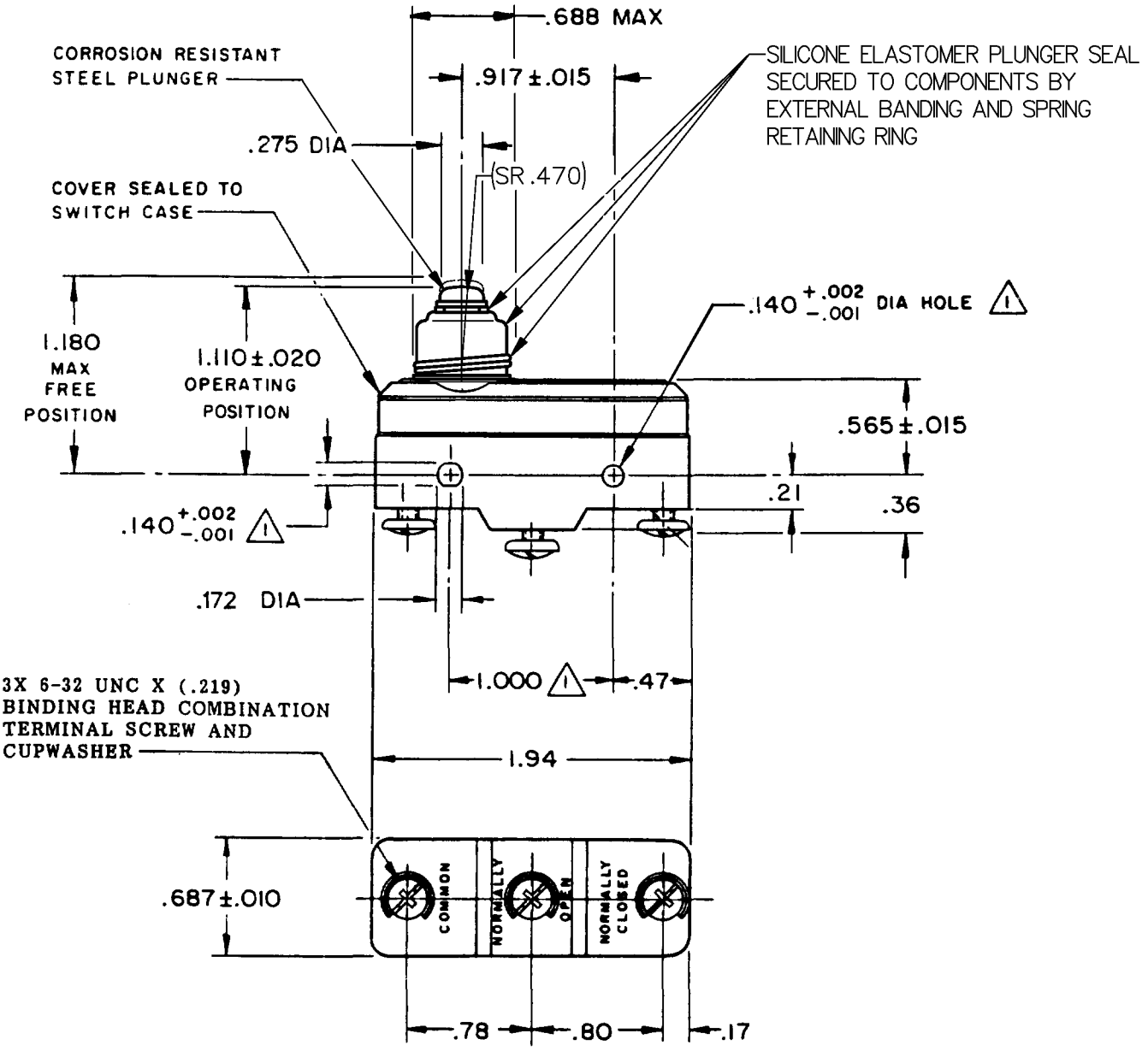

NOTES

1. MOUNTING HOLES WILL ACCEPT PINS OR SCREWS OF .139 MAX ON 1.000 ± .002 CENTERS
2. – SEALED CONSTRUCTION PROVIDES SPLASH RESISTANCE

THIS DRAWING COVERS A PROPRIETARY ITEM AND IS THE PROPERTY OF MICRO SWITCH. A DIVISION OF HONEYWELL. THIS DRAWING IS NOT TO BE COPIED OR USED WITHOUT THE APPROVAL OF MICRO SWITCH.

THIRD ANGLE PROJECTION

CHARACTERISTICS

OPERATING FORCE — — — — 13-19 OZ

RELEASE FORCE — — — — — 4 OZ MIN

DIFFERENTIAL TRAVEL — .0004 - .0025

OVERTRAVEL — — — — — — .062 MIN

ELECTRICAL DATA

CONTACT ARRANGEMENT
S P D T

L96
15A 125, 250 OR 480 VAC
1/8HP 125 VAC, 1/4HP 250 VAC
1/2A 125 VDC, 1/4A 250 VDC

L288
L299
L306
16A 250V ~ T85 5E4

SCALE FULL

DO NOT SCALE PRINT

TOLERANCES
APPLY TO DESIGN UNITS. CONVERSIONS ARE ONLY FOR REFERENCE. UNLESS NOTED, TOLERANCES ARE ±

	DIM. mm	TOL. mm/in	DIM. in	TOL. mm/in
NO PLACES	X	1/.04		
ONE PLACE	X,X	0.4/.016	X.X	0.8/.03
TWO PLACES	X,XX	0.15/.006	X.XX	0.38/.015
THREE PLACES			X.XXX	0.13/.005
ANGLES				

DESIGN UNITS SI METRIC ☐ US CUSTOMARY ■

WEIGHT .076 LB

M BZ-2RDS-A2-S PAGE 1 OF 1
RELEASE NO. PR-6725
REPLACES
DRAWING NUMBER
ISSUE 8
CHECK

REVISIONS

A	CO 39621
	T M M 16 DEC 77
B	C067209
	J A P 3 MAY 90
C	C071458
	J A L 21 NOV 91
D	CO-73287-J
	J A L 22 NOV 93
E	CO-77588
	K D R 29 MAR 94
F	C083108
	G J W 10 JUN 96
G	C093346
	D L T 8 SEP 98

CHECK 17 OCT 77
CHECK
CHECK 13 OCT 77
DRAWN S L B

FORMTEK